The Sovereign Fortress

Cryptographic Truth for the Physical World.” Aeonik

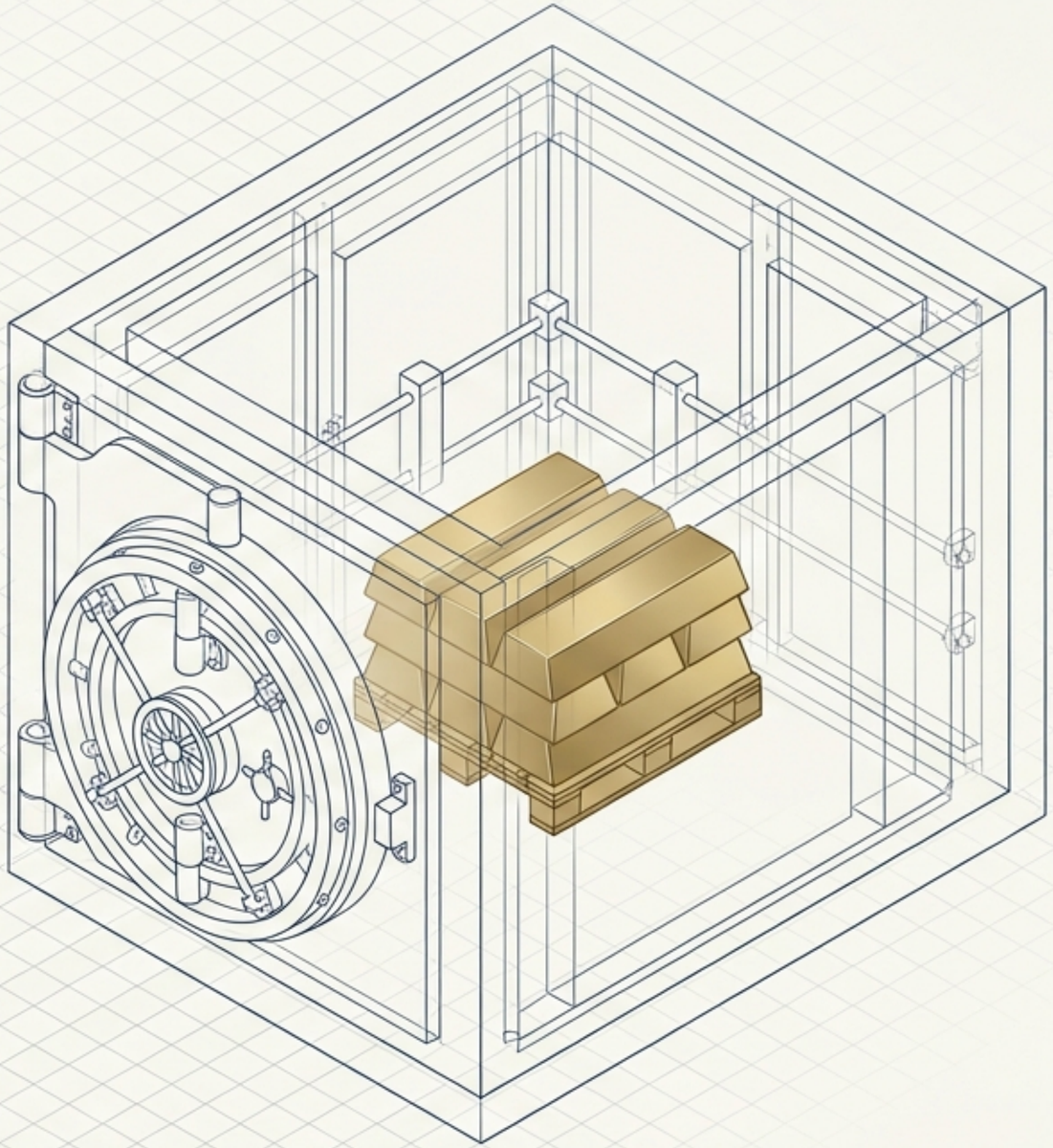

SKU: SOV-BNDL-FORTRESS | **STATUS:** ACTIVE | **AUTHORIZATION:** DE-RETICULAR OPERATIONS

NotebookLM

Cloud Security is an Actuarial Liability.

Legacy Cloud-Connected

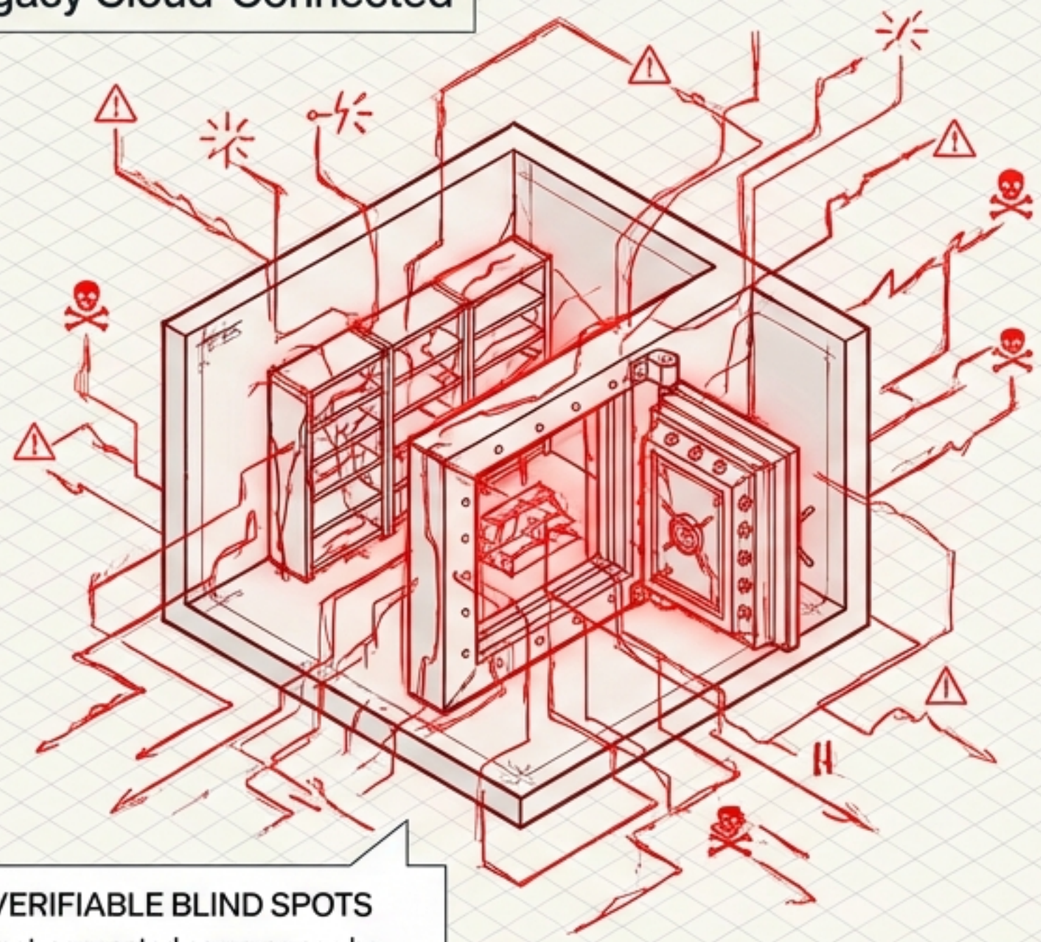

UNVERIFIABLE BLIND SPOTS

Internet-connected cameras can be looped, access logs altered, and remote environments spoofed. When the macro-grid fails, security fails.

Sovereign Air-Gapped

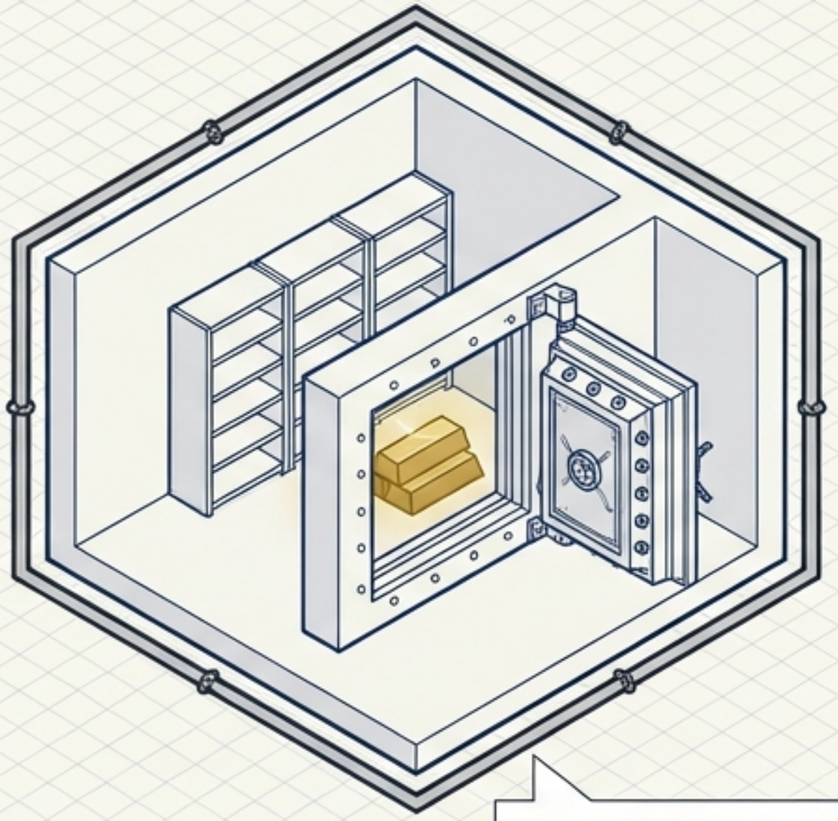

THE COST OF UNCERTAINTY

Insurance actuaries are forced to charge exorbitant premiums to cover unverifiable remote vulnerabilities for billion-dollar asset classes.

Protecting sovereign bullion, fine art, and antiquities requires mathematically eliminating the public internet from the security model.

NotebookLM

The Sovereignty Shift: Legacy Cloud vs. Air-Gapped AI

DIMENSION	LEGACY CLOUD	SOVEREIGN FORTRESS
Vulnerability Profile	✕ Remote hacking & spoofing	✓ 100% Air-Gapped Physical Isolation
Blind Spots	✕ Limited 2D Camera Arcs	✓ Continuous 3D Volumetric Digital Twin
Authentication	✕ Visual Human Verification	✓ Multispectral Molecular Syncing
Environmental Threat	✕ Macro-grid Dependent	✓ Localized `LoRaWAN Ag-IoT Sub-Net`
Insurance Impact	✕ Exorbitant Premiums for Unverifiable Risk	✓ Massive Reductions via Zero-Knowledge Proof
Connectivity	✕ Dependent on Public ISP	✓ Private 5G Canopy / Zero External Dependency

NotebookLM

The Air-Gapped Walled Garden

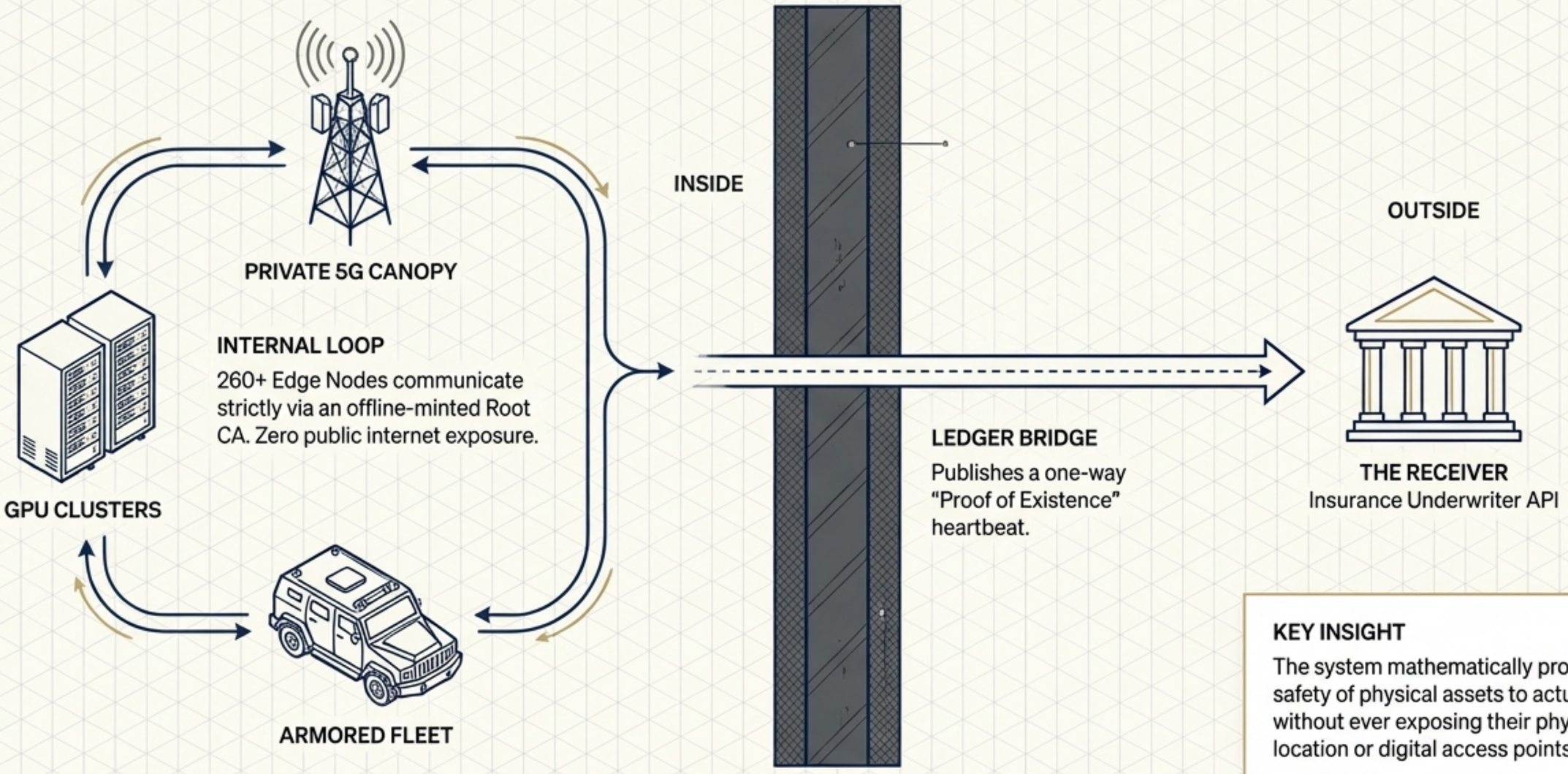

KEY INSIGHT

The system mathematically proves the safety of physical assets to actuaries without ever exposing their physical location or digital access points.

NotebookLM

Perimeter Sovereignty: Secure Transit Orchestration

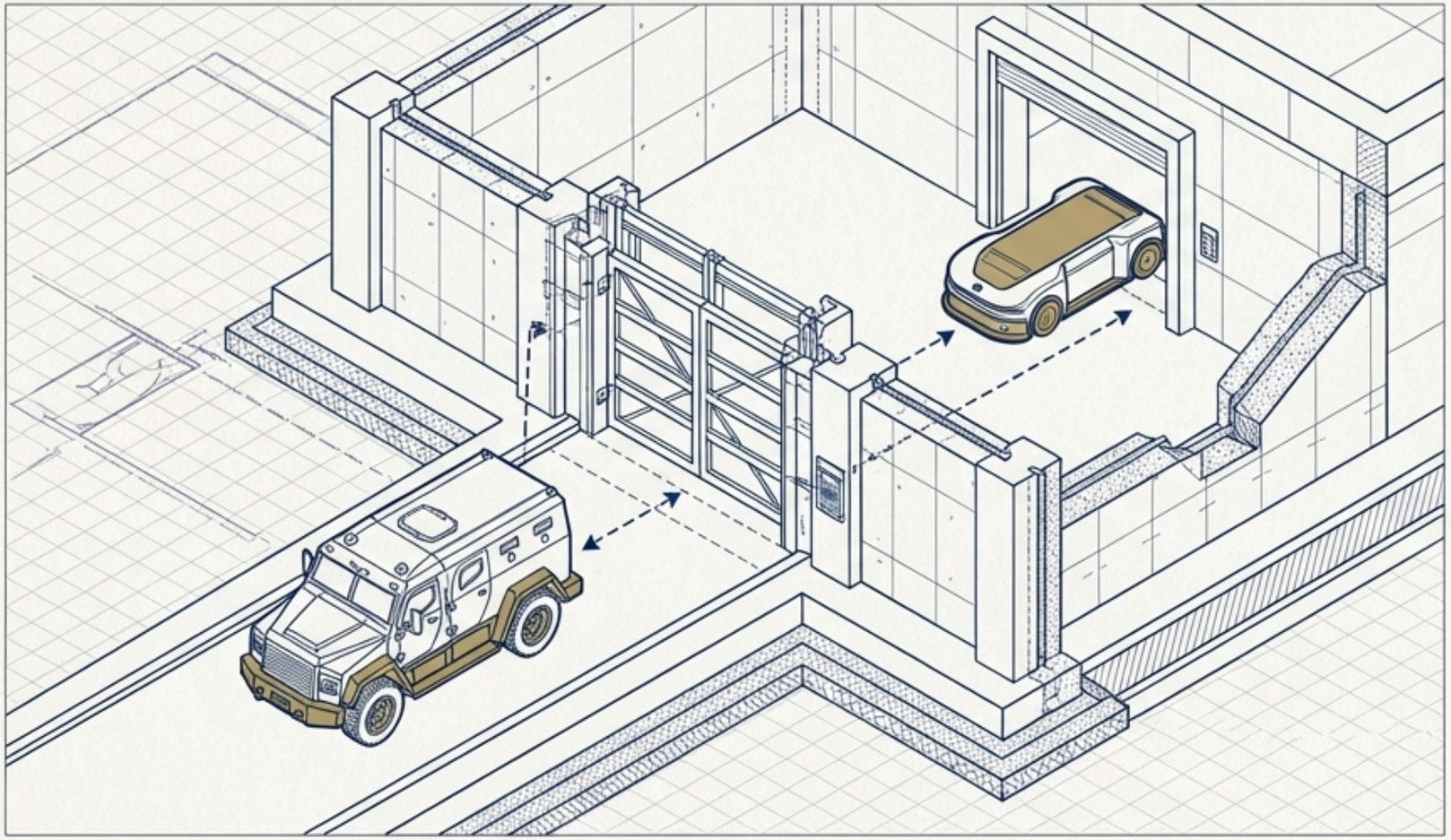

Zero human interaction required for loading bay transfers.

1. FLEET INTEGRATION

10x Nomad Fleet Kits integrate directly into the CAN Bus of incoming armored transport trucks.

`CAN BUS: ISO 11898-1 // BAUD: 1M/S`

2. CRYPTOGRAPHIC HANDSHAKE

The truck automatically handshakes with the Vault CA upon approach.

`CA TYPE: ROOT X.509 // ALGO: ECDSA P-521`

3. AUTOMATED ACCESS

Industrial Foreman relays instantly OCR the digital customs manifest and open physical exterior gates.

`OCR: 99.8% ACCURACY // RELAY: SOLID STATE 12V`

4. INTERNAL DISPATCH

An internal Automated Guided Vehicle (AGV) is dispatched to retrieve cargo via GPS-denied dead-reckoning.

`NAV: IMU/LIDAR SLAM // PATH: OPTIMAL SHORTEST`

NotebookLM

Anatomy of a Fortress: The Interior Grid

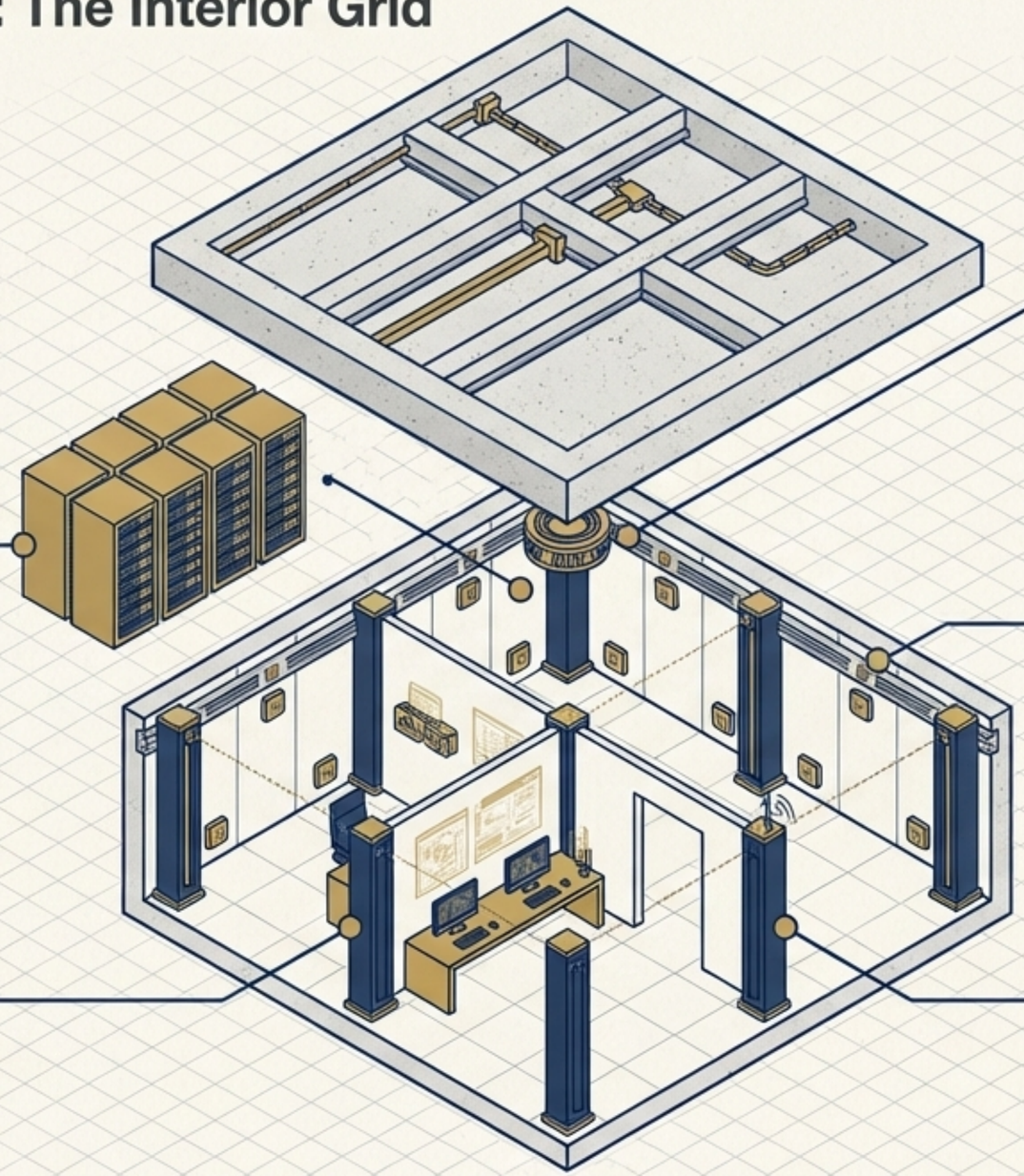

THE BRAIN (SECURE SERVER ROOM)

2x Sentry Pro 'Fortress Edition' GPU Clusters (128GB VRAM) rendering the live 3D Digital Twin.

THE EYES (CEILING/CORNERS)

50x Vault Warden LiDAR Arrays syncing sub-millimeter physical movement to the Digital Twin.

THE CLIMATE GRID (WALLS/VENTS)

150x Industrial Foreman Micro-Nodes monitoring hyper-precise humidity, temperature, and biological spore counts.

THE ADMIN SUB-NET (DESKS/OFFICES)

Sovereign Executive nodes automatically OCRing legal bonds and maintaining an isolated medical database.

THE COMMS (STRUCTURAL PILLARS)

30x Nomad Forge-Points creating an ultra-low latency Private 5G Canopy, piercing lead-lined subterranean walls.

NotebookLM

Asset Authentication: The “Golden State”

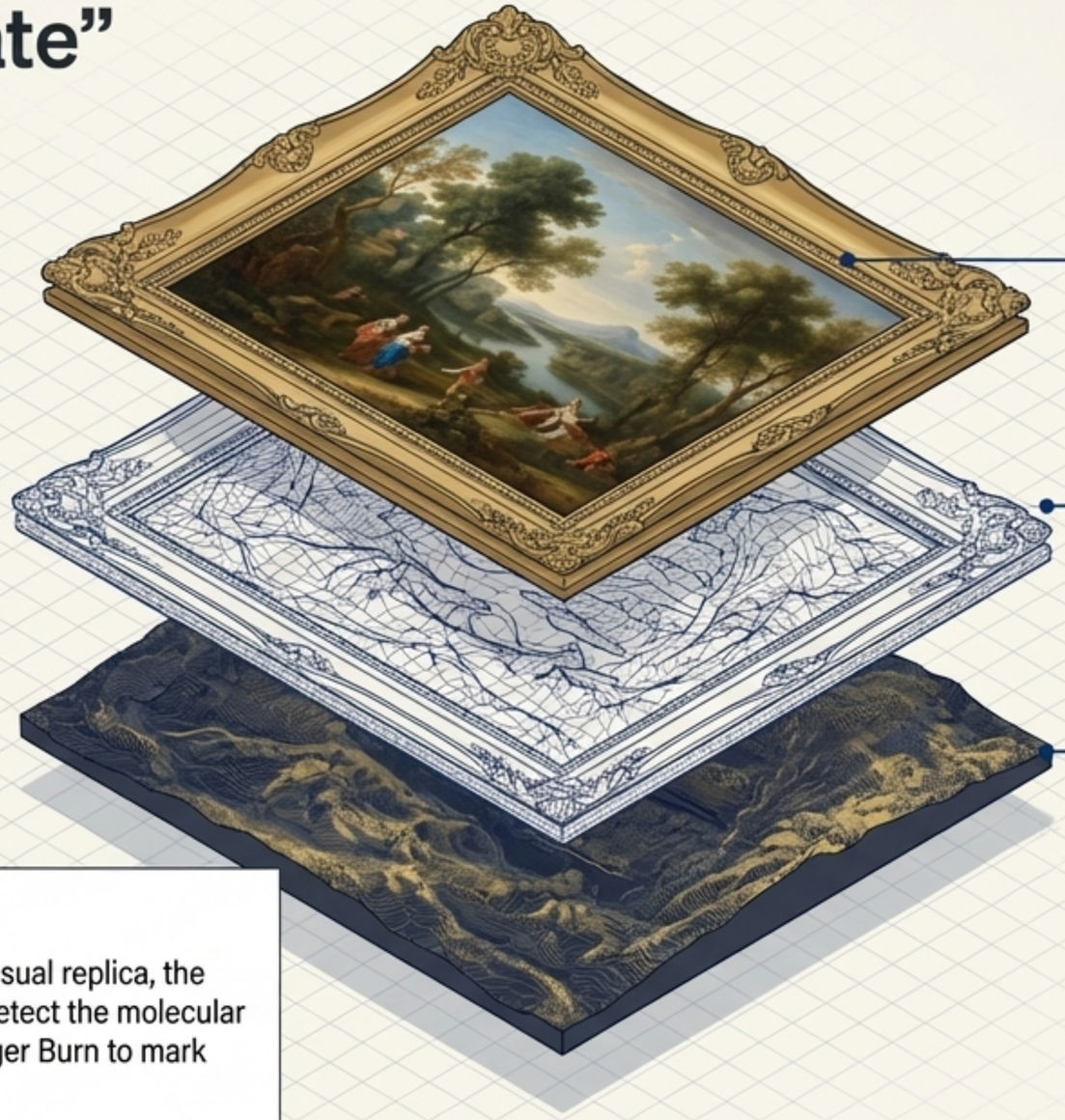

LAYER 1: THE VISUAL IMAGE

What a standard 2D security camera sees. Easily fooled by visual replicas.

LAYER 2: VOLUMETRIC MESH

The Vault Warden LiDAR scan tracking >2mm volumetric shifts and physical dimensions.

LAYER 3: MULTISPECTRAL SYNC

Camera data verifying precise pigment density, canvas weave, and molecular signatures against the baseline “Golden State”.

INSTANT FORGERY DETECTION

If a thief replaces an asset with a perfect visual replica, the 20x Multispectral PTZ cameras instantly detect the molecular discrepancy, triggering an immediate Ledger Burn to mark the asset as compromised.

NotebookLM

Active Countermeasures: The 15-Millisecond Lockdown Loop

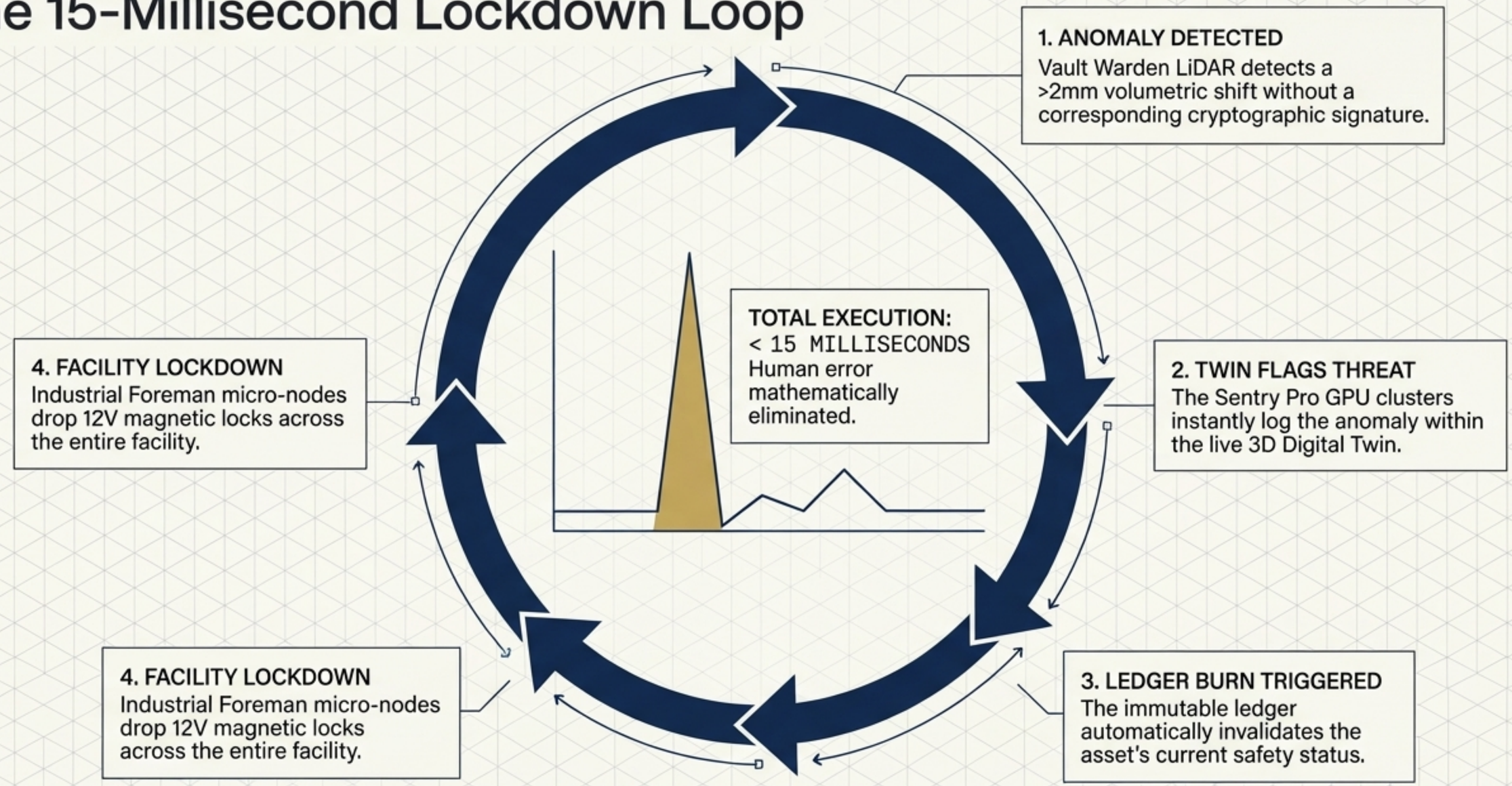

NotebookLM

Diagnostic Matrix: Automated Threat Mitigation

THE INSIDER THREAT

Vector:
Rogue vault manager attempts to alter the Digital Twin to hide theft.

Automated Mitigation:
Multi-Sig Ledger Architecture requires multi-signature cryptographic authorization (Client + DeReticular + Insurer) to override audit logs.

Space Mono.

HVAC SABOTAGE

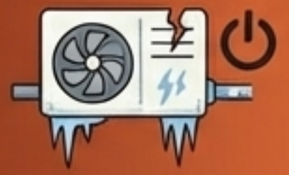

Vector:
Attacker cuts power/HVAC to destroy climate-sensitive antiquities.

Automated Mitigation:
Biological Ag-IoT micro-nodes run on independent batteries. A 1% climate deviation routes LoRaWAN alerts to trigger backup generators.

Space Mono.

PHYSICAL NODE EXTRACTION

Vector:
Thieves attempt to rip the central Sentry Pro GPU from the rack to steal data.

Automated Mitigation:
Volumetric Chassis Defense uses internal gyros. Unauthorized movement permanently encrypts NVMe drives and securely purges RAM instantly.

Space Mono.

NotebookLM

Tactical Deployment Timeline

PHASE 1: ACTUARIAL INTEGRATION

- Engineers ingest vault CAD/BIM models to build the pre-deployment Digital Twin.
- Audit-logging logic is co-reviewed with insurance underwriters to pre-approve premium reductions. Offline Root CA minted.

TECH SPEE: CAD/BIN V.4.1
ROOT CA IE: GLIVBS ...
PREAIHR SEBOETIOS. PRE-APPROVED

DATA INGEST

PHASE 2: SECURE FREIGHT

- GPU clusters undergo thermal burn-in.
- Hardware is tamper-sealed with zero-day destruct triggers and dispatched via dedicated armed LTL freight.

LOGISTICS: ARMED LTL
TAMPER SEALS: ZERO-DAY DESTRUCT
BURN-IN: 150HS @ 60°C
DISPATCH: CONFIRMED

PHYSICAL TRANSPORT

PHASE 3: CORE IGNITION

- Sentry Pro clusters racked in air-gapped data centers.
- Volumetric LiDAR and Multispectral cameras activate, scanning the 'Golden State' of all assets into the immutable ledger.

DEPLOYMENT: AIR-GAPPED DC
SENSORS: LIDAR/MULTISPECTRAL
LOCKED STATE: IMMUTABLE 'GOLDEN STATE'
ACTIVATION: SHROUDED

SYSTEM ACTIVATION

NotebookLM

The Actuarial ROI: An Engine for Sovereignty

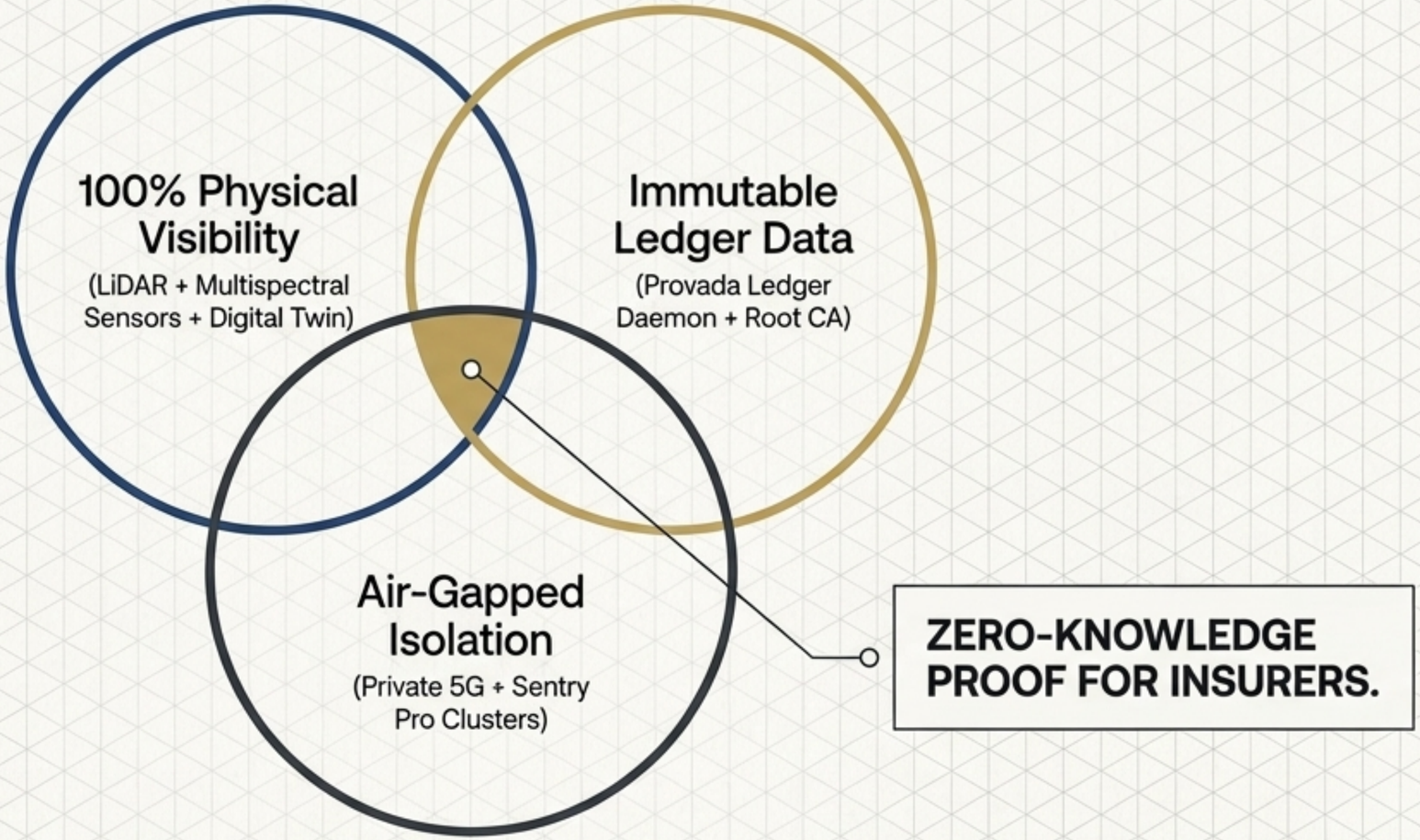

The Sovereign Fortress is not just a $549,999 security expenditure. It is an **automated actuarial compliance engine**. By mathematically eliminating human error and cloud-hacking from your risk profile, the system pays for itself through massive, verifiable reductions in multi-million-dollar insurance premiums.

NotebookLM